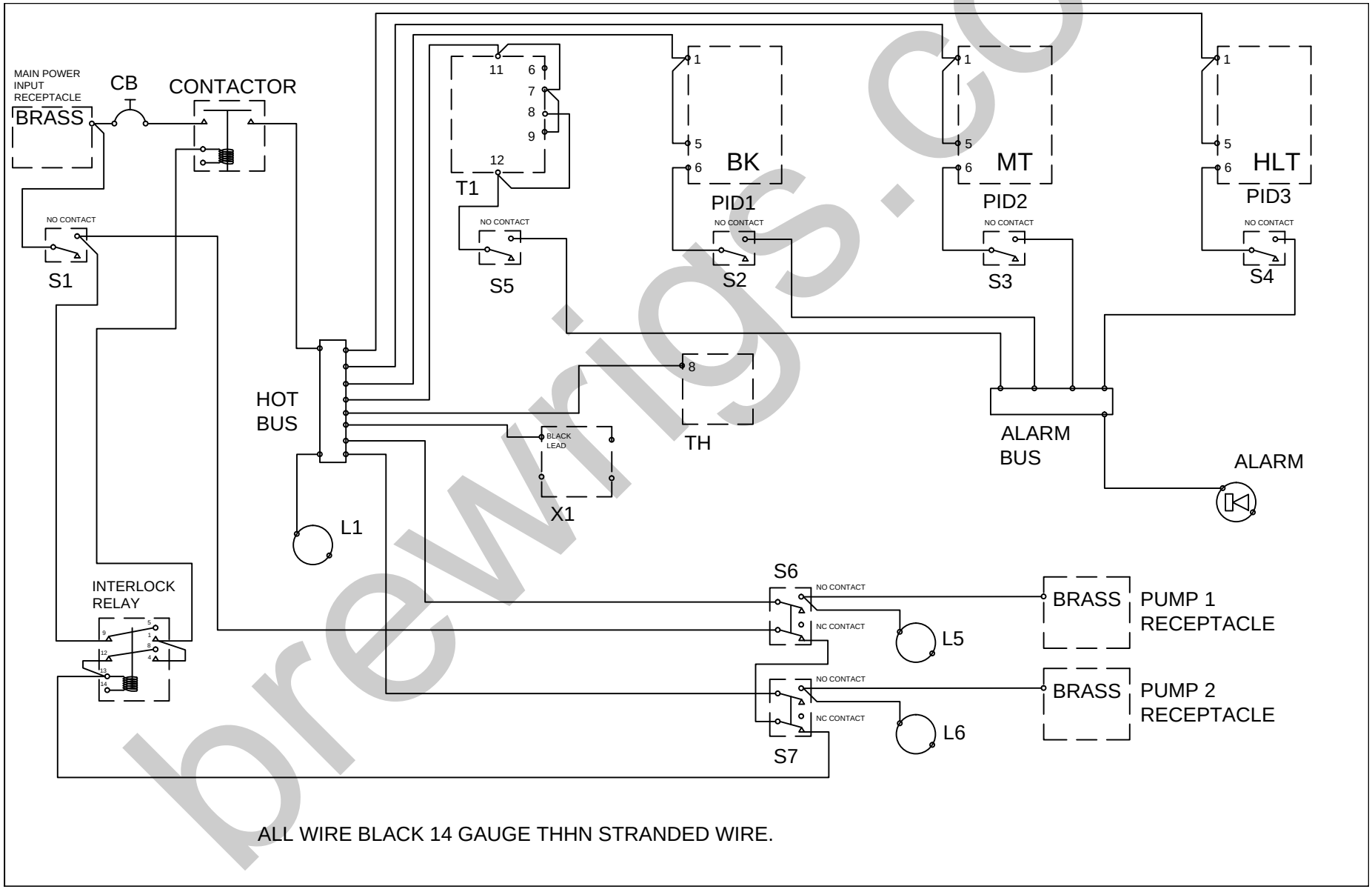

ALL WIRE BLACK 14 GAUGE THHN STRANDED WIRE.

brewrigs.com