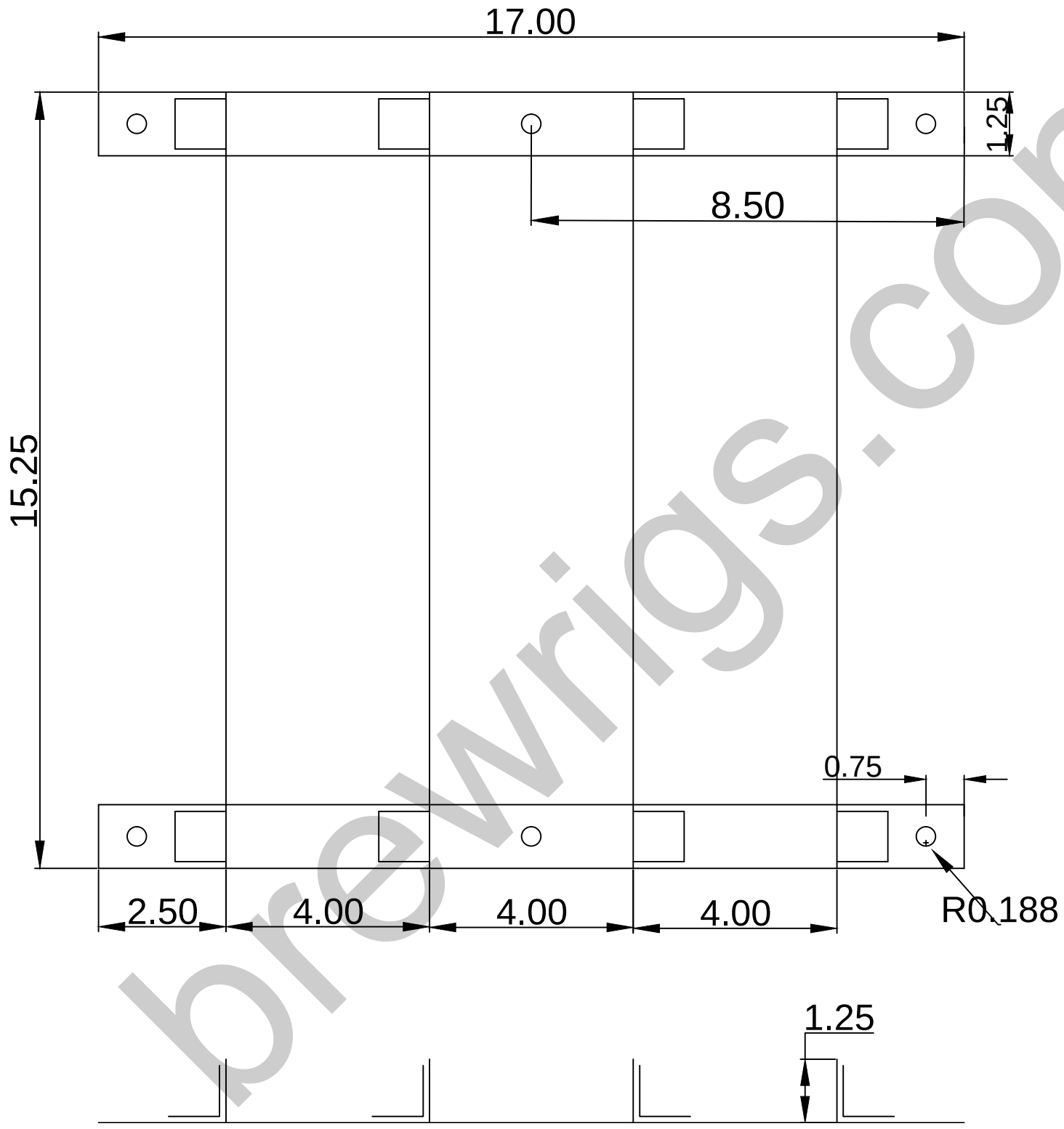

brewrigs.com